GK 1060 S-NG

HYDRAULIC BREAKER

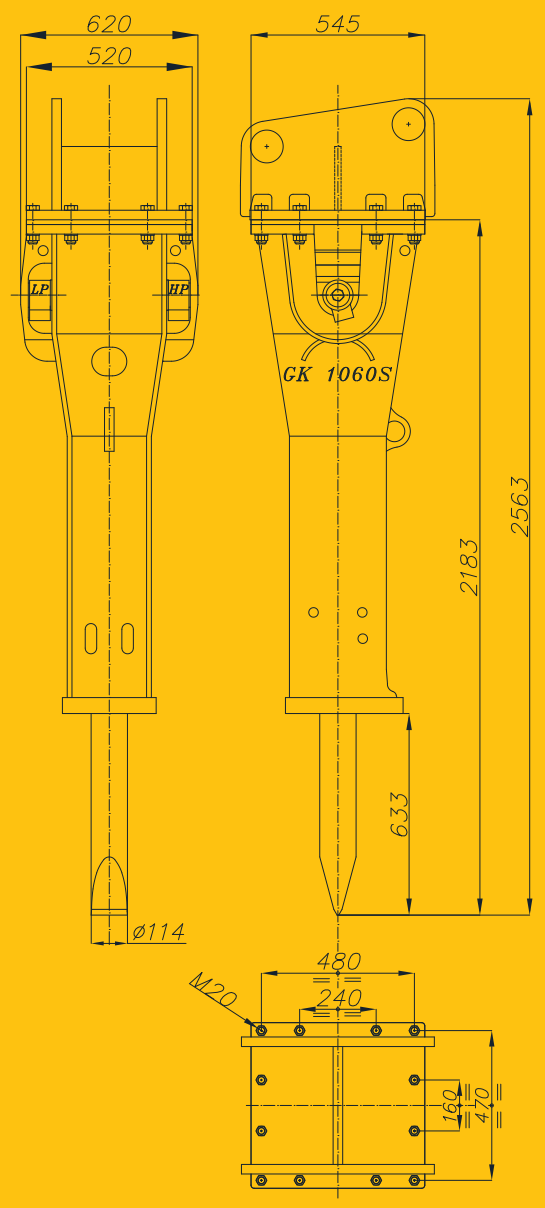

OPERATING WEIGHT	1050 KG (2315 LB)
TOOL DIAMETER	114 MM (4.49 IN)
OIL FLOW	130÷150 L/MIN
WORKING PRESSURE	110÷120 BAR (1595÷1740 PSI)
RELIEF VALVE	170 BAR (2465 PSI)
MAX. BACKPRESSURE	12 BAR (174 PSI)
BLOW ENERGY	2300 JOULE
REQUIRED POWER	28 KW (38 HP)
IMPACT RATE	500÷600
CARRIER WEIGHT	13÷20 T (28660÷44092 LB)
MAX. NOISE LEVEL (SILENCED VERSION)	88 DB-A
INNER DIAMETER HP LINE	20 MM (0.79 IN)
INNER DIAMETER LP LINE	36 MM (1.42 IN)

www.italdem.com